Mircom™

Complete **Fire Detection** and **Notification** Solutions

www.**mircom**.com

FleXNet™

INTELLIGENT NETWORK AND AUDIO SYSTEM

- Multiple Intelligent Signaling Line Circuits (SLC)
- Each SLC is capable of supporting 99 analog sensors and 99 addressable modules which can be wired in class A (Style 6 or 7) or class B (Style 4)
- Four class A/B (Style Z/Y) indicating circuits on board with provisions for expansion
- Large multi-line back-lit LCD display with user friendly menu
- Correlatable switch inputs that allow for multi-functional outputs
- Four alarm queues with selector switches and LEDs for alarm, supervisory, monitor and trouble
- Auxiliary relay contacts for common alarm, common supervisory and common trouble
- RS-232 output for remote system printer or CRT
- Two event history logs comprised of a 1000 alarm history log for alarm related events and a 6000 event log for all events
- Computer laptop programmable with easy to use configuration tool
- Boolean logic capabilities
- Panel selection for UL or ULC requirements for smoke sensors (sensitivity) via computer laptop
- Capability to adjust intelligent smoke detector sensitivity levels
- Multi-channel distributed audio
- Support for addressable & conventional firefighter telephones
- Up to 63 nodes
- Peer-to-peer network communications
- Multiple lobby control centers
- Class B (Style 4) or class A (Style 6 or 7) wiring configuration

- Fault-resistant proprietary communications protocol
- Ethernet output for remote diagnostics and troubleshooting
- Graphics Monitoring Software and BMS Interface

INTELLIGENT

FIRE ALARM

CONTROL SOLUTIONS

Mircom™ fire alarm and emergency audio systems are protecting lives and property in thousands of facilities worldwide.

- COMMERCIAL TOWERS
- HEALTH CARE
- UNIVERSITY CAMPUSES
- CORPORATE CAMPUSES
- HOSPITALITY
- LARGE SHOPPING MALLS
- PETROCHEMICAL FACILITIES
- MILITARY FACILITIES
- AIRPORTS/TRANSPORTATION
- HIGH-RISE RESIDENTIAL

For a complete list of our project portfolio, please visit our web site at www.mircomgroup.com or contact us today.

FLEX-NET™ INTELLIGENT SYSTEM DIAGRAM

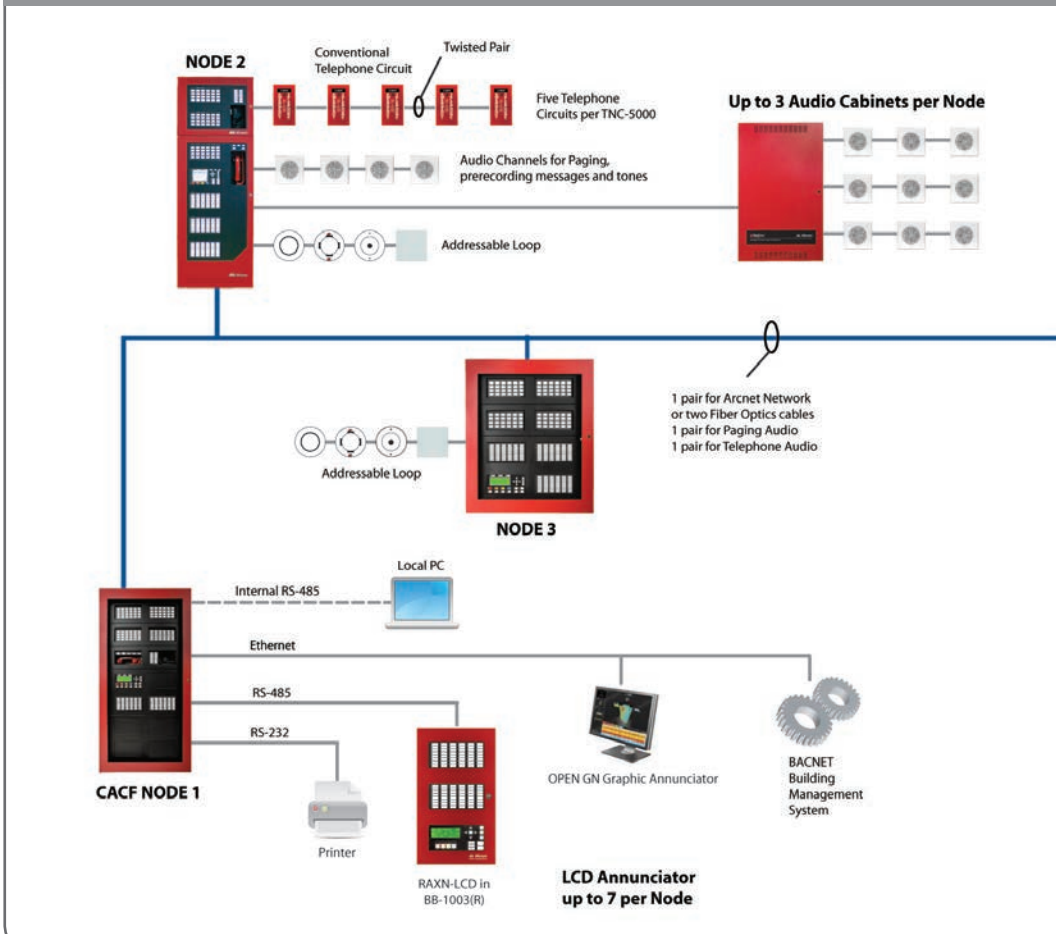

FX-2000 SERIES INTELLIGENT FIRE ALARM CONTROL UNITS

The FX-2000 Series is ideal for residential, commercial, industrial, and institutional applications. The base system consists of one analog loop and four indicating circuits. In addition the base system supports conventional hard wired modules. With its flexible modular design, the FX-2000 Series can be configured to meet challenging requirements without compromising its easy installation and operation.

- SLCs are selectable for either class A (Style 6) or class B (Style 4) operation
- Four class A/B (Style Z/Y) indicating circuits with provisions for expansion
- Large 4 line by 20 character back-lit LCD display
- Sixteen-zone configurable LED annunciator
- Supports LCD, LED and graphic annunciation
- 198 addressable devices per SLC
- Base system supports 16 conventional hard wired modules with the provision to add more using the ALC-H16 Hard wire Loop Controller Module
- Three level password protection with field programmable definition which enables the installer to determine what functions are accessible for each password level
- Four Alarm Queues with selector switches and LEDs for Alarm, Supervisory, Monitor and Trouble
- 6 or 12 Amp power supply
- Correlatable Switch Inputs which allows for multi-functional outputs
- Auxiliary relay contacts for Common Alarm, Common Supervisory and Common Trouble
- RS-232 output for remote system printer or CRT
- Two logs track system event history (2000 events) and alarm event history (1000 events) which can be viewed on screen or sent to a printer for easy analysis and system maintenance
- Front Panel Auto-Configure and/or Computer laptop Programmable
- Common Control switches and/or indicating LEDs for System Reset, Signal Silence, Fire Drill, Acknowledge, General Alarm, Lamp Test, A.C. On, Pre-Alarm and Ground Fault
- Seamlessly integrates to the QX-5000 Voice Evacuation System
- UUKL listed for smoke control

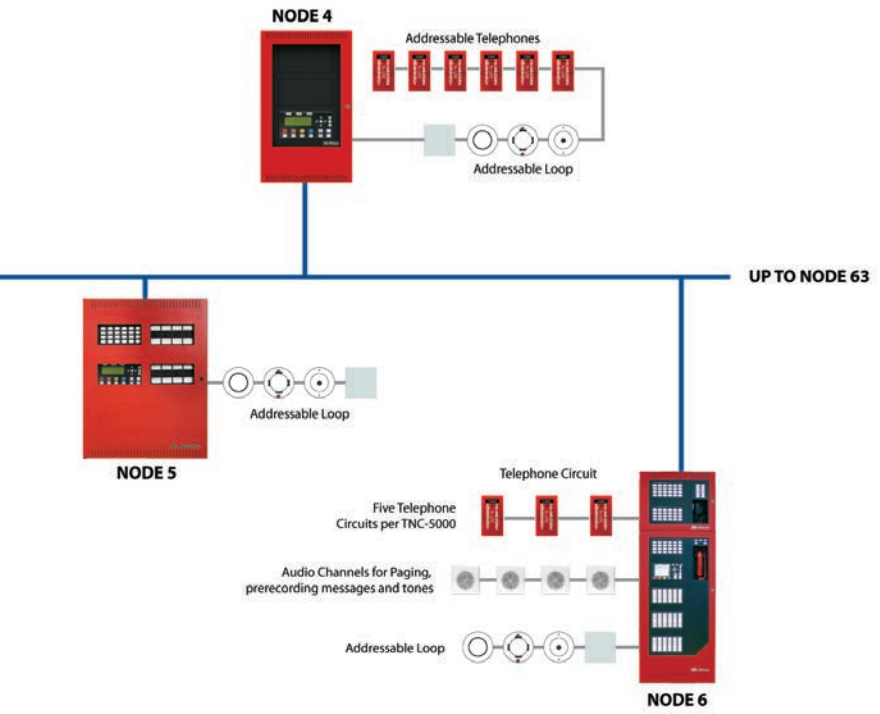

FleXNet™

Compact Network Panel

Multi-loop system with provisions for up to 3 expansion modules

Mid-Size Network Panel

Multi-loop system with provisions for up to 17 expansion modules

Large Size Network Panel

Multi-loop system with provisions for up to 9 expansion modules. Additional modules can be added with the use of an expander chassis.

Additional enclosures sizes available.

INTELLIGENT FIRE ALARM DEVICES

FX-350 SERIES INTELLIGENT DEVICES

Mircom™ offers a complete line of FX-350 addressable devices for any application. Analog addressable sensors include photoelectric, thermal and multi-criteria sensors. In addition, there are single- and dual-action pull stations and addressable modules including monitor, output, relay and isolator models.

FX-2000/FLEX-NET SERIES INTELLIGENT DEVICES

To support the market-leading capabilities of FX-2000 Series control panels, Mircom™ FX-2000 Series analog addressable sensors, pull stations and modules are designed with advanced features, including sensitivity monitoring, selection and performance in any application.

FX-2000 SERIES ANNUNCIATORS AND PROGRAMMABLE MODULES

The FX-2000 Intelligent Fire Alarm Control Units support programmable modules that can be connected either internally to the fire alarm unit or externally via the RAX-LCD Remote Shared Display. Connection to the RAX-LCD allows for unique configurations for a specific remote location.

RAX-LCD Remote Shared Display

- Provides LCD annunciation
- Driver module for standard or reduced zone annunciation
- Driver modules for RAX-1048TZDS, FDX-008 and IPS-2424DS when mounted remotely

IPS-2424DS Programmable Input Switches Module

- 24 programmable switches
- Switches operate in a toggle operation
- Indicates status of disconnected zones

RAX-1048TZDS Programmable LED Annunciator Module

- 48 programmable bi-coloured LEDs

FDX-008 Fan Damper Control Module

- Individual programmed circuits for fan or damper control
- Three position selector switch for Off, On and Auto
- Supervised for operation
- UUKL listed for smoke control
- Graphic Driver modules available

FX-350 SERIES

INTELLIGENT FIRE ALARM CONTROL UNITS

The FX-350 Series Intelligent Fire Alarm Control Panels support 60, 126 or 378 addressable points. Select models are available with a built-in UDACT/Digital Communicator. Easy to install and operate, the FX-350 Series is ideal for small to medium commercial, institutional and industrial occupancies.

- 2 line by 20 character back-lit LCD display
- Powerful 5 Amp dedicated power supply
- Four class B (Style Y) indicating circuits
- Select models include a 32 zone LED annunciator that can be expanded to 64 zones (32 alarm and trouble LEDS)
- Two event history logs – 200 events per log
- Configurable for two stage operation
- Configurable via the front panel, PC configurator, or remote dial up through the built-in modem (UDACT models)
- Software bypass groups
- Supports Photoelectric Sensors, Variable Heat Sensors and Multi–Sensor (Heat/Photo)
- Models available with an integrated UDACT/ Digital Communicator
- Digital Communicator can be configured for DACT or UDACT mode of operation
- Built-in sync protocols for the following strobe manufacturers: Mircom, Amseco, System Sensor, Gentex, Farady and Wheelock
- Relay contacts for Common Alarm, Auxiliary/Alarm (Disconnectable), Common Supervisory and Common Trouble
- Configurable Signal Silence Inhibit, Auto Signal Silence, Two Stage Operation and One-man walk test
- RS-485 Interface for Remote LED and LCD Annunciators
- Optional modules for additional internal relay circuits and City Tie/Polarity Reversal
- Optional trim ring for semi-flush mounting

FX-3500 SERIES

INTELLIGENT FIRE ALARM CONTROL UNITS

Mircom's FX-3500 Series systems are powerful Intelligent Fire/Agent Release Control Units that are UL/ULC listed for fire alarm services, including releasing service. The FX-3500 Series provides up to three intelligent Data Communication Links (DCLs) / Signaling Line Circuits (SLCs) that support a new AP protocol, which is faster and has capacity for up to 954 intelligent devices. In addition, the FX-3500 Series has backward compatibility support for CLIP devices. The FX-3500 Series systems are recommended for both new and retrofit fire detection and/or special-hazard/critical-infrastructure suppression/special agent applications. Capable of releasing up to six discrete physical hazard zones, the FX-3500 offers exceptional value for complex installations. Programming versatility makes the FX-3500 Series the ideal choice for dependable fire detection, signaling and protection in industrial, commercial and institutional buildings.

- New fast AP protocol, extending number of devices on the loops, up to 954 (318 X3)
- Panel supports both AP and CLIP protocol
- Use USB security key
- Utilizes the universal box
- Intelligent Addressable Fire Alarm with Releasing Control
- Six dedicated hazard zones
- Utilizing cross-zoning or counting detection
- Has a 4X20 line display
- Flush or Surface mountable with no additional hardware required

FX-3500 SERIES NETWORK DIAGRAM

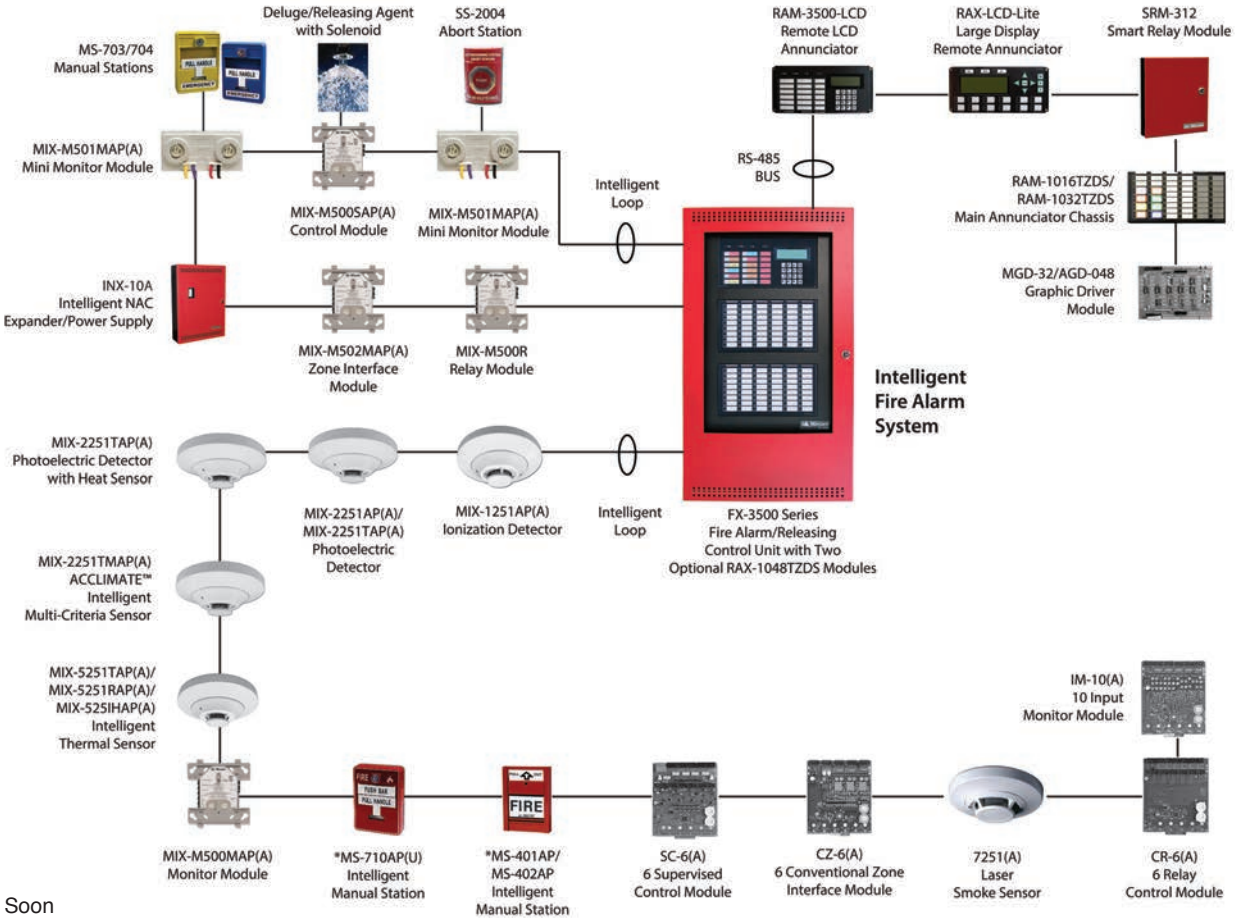

*Coming Soon

VOICE EVACUATION SYSTEM

VOICE EVACUATION SPEAKERS AND FIREFIGHTER PHONES

FIREFIGHTER TELEPHONE HANDSETS

Mircom™ firefighter telephones are designed for maximum performance with Mircom™ QX-5000 and Flex-Net™ emergency zoned audio systems. These wired or addressable telephones feature heavy-duty construction, flush or surface mounting and the option for plug-in portable configurations.

SP-SERIES SPEAKERS

Mircom™ SP series speakers broadcast high quality tone signals and are ideal for voice notification in multi-unit residential, hospitality, shopping malls, sport facilities and other applications where attractive appearance and dependable performance are essential.

SP-SERIES SMART SPEAKERS

Mircom™ 4-inch SP 'Smart' Series speakers are designed for maximum performance with Mircom™ QX-5000 and Flex-Net™ emergency zoned audio systems and provide local speaker silencing and resound. Silencing can be done on the speaker baffle or via remote switch plates.

For Canadian market

QX-5000 SERIES VOICE EVACUATION SYSTEM

Mircom's QX-5000 Series is a multi-channel, zoned audio system that allows the operator to selectively page from a central location to any of the system's audible devices. In addition, the QX-5000 allows for zoned, fire fighter communication with remote telephone handsets that are permanently installed throughout a building. The system has a simple interface to the Fire Alarm Control Unit, and contains its own power supply and battery backup system.

- Multi-channel, zoned voice paging and alarm system
- Multiple lobby capability
- Multiple amplifier sizes
- Zone or All-Call selectability (Alert/Evacuation)
- Provides single or multiple command center for use in emergencies
- Removable terminal blocks for ease of installation and maintenance
- Operates from integrated 24VDC backup batteries in the event of a power failure
- Zoned, firefighter telephone capability
- Indication of all required fault conditions
- Speaker circuits are integrated with amplifier circuits
- Multiple amplifier sizes (up to 7 per enclosure)
- Maintains full supervision during battery operation
- Digitized voice capability

VOICE EVACUATION DIAGRAM

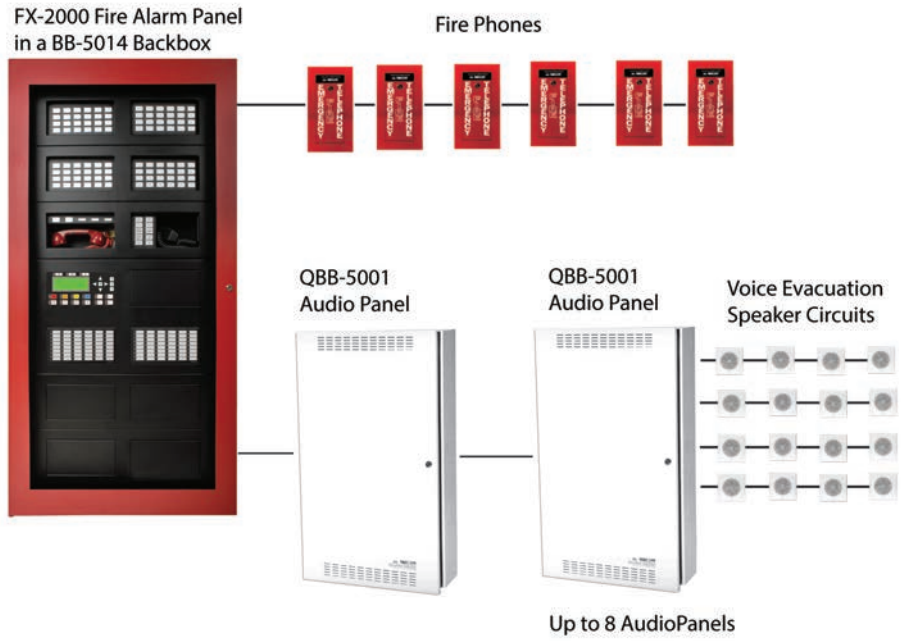

FIRE AND GAS DETECTION SYSTEM

PRO-2000 SERIES FIRE AND GAS NETWORK DETECTION AND CONTROL SYSTEM

The PRO-2000 system combines and integrates the traditional autonomous functions of fire detection and PLC-based gas detection in a single system. The system has been designed for the unique requirements of special risks applications.

- Up to 3,600 local detection/control devices
- Max. 10,000 networked detection/control devices
- Support for Multi-Master networking
- Can be integrated to Bacnet network
- Integrated gas detection
- Agent releasing service
- Adjustable alarm set points
- Programmable logic for alarm annunciation, alarm evacuation, smoke control releasing
- Mosaic Mimic Display Panel for Fire & Gas Annunciations
- Centralized and/or distributed MODBUS interface for emergency shutdown (ESD) and distributed control systems (DCS)
- Extensive diagnostic capabilities and calibration of gas transmitters
- Battery backed-up real time clock and event log with built-in battery charger
- Independent ground fault detection circuits on each interface card for easy ground fault tracking
- Wall mount enclosure equivalent to Nema 12 or Nema 12K
- Coast Guard and ABS approved for marine applications

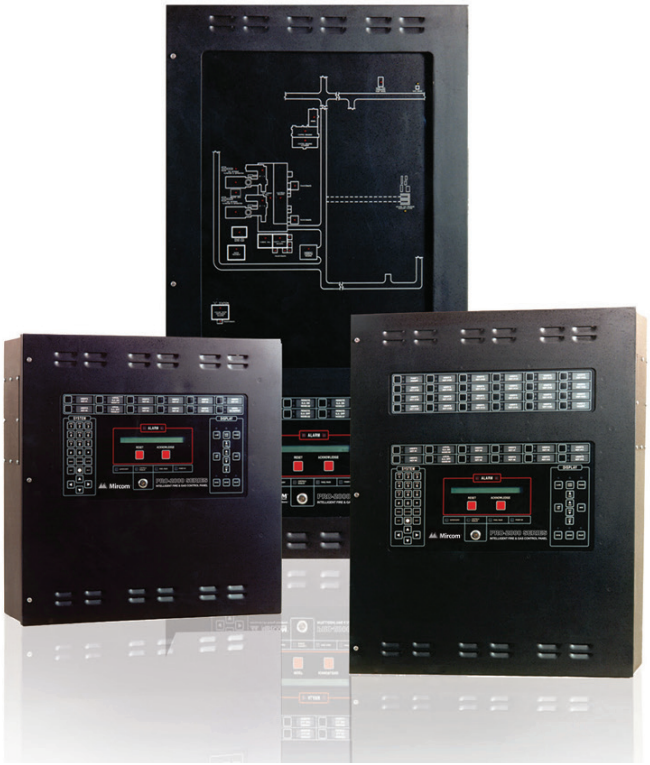

PRO-2000 SERIES NETWORK DIAGRAM

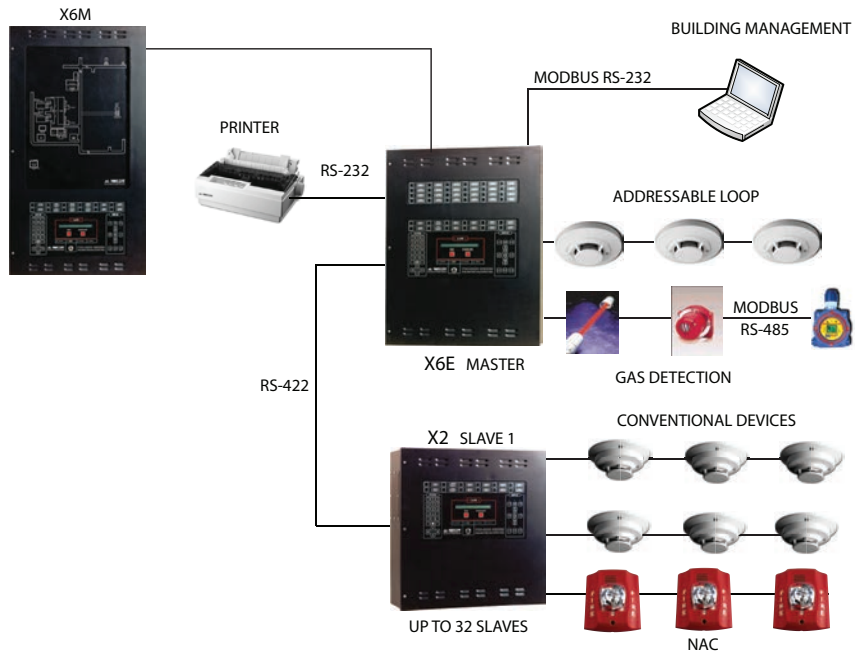

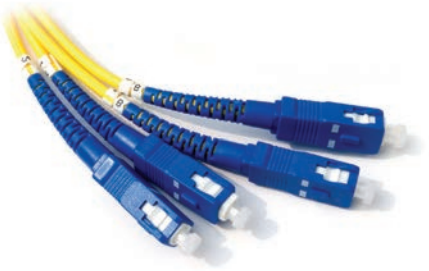

PRO-2000 MODBUS communications directly integrates the system to distributed control systems (DCS) and emergency shutdown (ESD) control systems in protection of special risk application including:

- PETROCHEMICAL PLANTS
- POWER PLANTS
- OFFSHORE PLATFORMS
- AIRPORTS/TRANSPORTATION
- MILITARY APPLICATIONS

CONVENTIONAL FIRE ALARM CONTROL UNITS

FA-1000 SERIES

FIRE ALARM CONTROL UNITS

The FA-1000 Series Fire Alarm Control Units are multi-zone units designed for maximum flexibility and easy installation and operation. Fully configurable from the front panel using push buttons and program switches, the FA-1000 Series enables the user to configure the system to meet their specific requirements.

- Modular design
- Each indicating circuit can be configured as silenceable or non-silenceable
- Each initiating circuit can be configured as Alarm, Supervisory, Waterflow or Trouble
- Two LEDs per initiating circuit; one for Trouble and one for Status
- RS-485 interface for remote multiplex annunciators
- Interface for remote trouble indicator
- Easy configuration via push buttons and program switches on the front panel
- Fully site or field programmable indicating circuits and auxiliary relays
- Slide-in labels for zone identification
- 6 or 12 Amp power supply
- Removable door for easy installation and servicing
- Removable terminal blocks for easy wiring and servicing
- Individual disconnect switches
- Configurable for two stage operation
- Eight to seventy two point system

FA-100 SERIES

FIRE ALARM CONTROL UNITS

Mircom's FA-100 Series Fire Alarm Control Units are designed for non-coded fire alarm systems in small commercial, institutional and industrial occupancies. The FA-100 Series are available in one, two and five zone configurations and provide easy installation and reliable operation.

- One, two or five class B (Style B) initiating circuit(s)
- One class B (Style Y) indicating circuit – 1.25 Amps (Two indicating circuits on the five zone model)
- Zone Silence/Disconnect Switch
- Output for remote trouble indicator
- Alarm and trouble contacts
- Temporal code generator

For Canadian Market

FA-260 SERIES

FIRE ALARM CONTROL UNITS

The FA-260 Series are power-packed Fire Alarm Control Units designed for small building fire protection. The FA-260 Series offer an exceptional feature set, a power supply that will handle the unit's full rated load, and flexible front panel programming for quick and simple configuration to suit the application at hand. Powerful, versatile, and ideally suited for small, fast turnaround fire applications.

- Two or five class B (Style B) dual-use zones
- Two class B (Style Y) notification appliance circuits
- 4.2 Amp power supply
- 500mA of aux. power
- Common alarm and trouble relay
- 'Secur-Bus' for remote annunciator
- Six programmable zone options
- Class A capability
- One-man walk test
- Programmable silence timers
- Front panel programming
- Initiating circuits can be configured for sprinkler alarm and supervisory

For International Market

FA-300 SERIES

FIRE ALARM CONTROL UNITS

Designed for small to medium commercial, institutional and industrial occupancies, the FA-300 Series Fire Alarm Control Units are powerful enough to meet today's installation demands. The FA-300 Series are available in six, eight and twelve zone models with a built-in UDACT/Digital Communicator on select models. The FA-300 Series are available in LED and LCD display configurations.

- Six, eight and twelve zone configurations
- LED and/or LCD display configurations
- Powerful 5 Amp dedicated power supply
- Configurable UDACT/Digital Communicator (on select models)
- Optional city tie/polarity reversal module
- Optional modules for internal relay circuits
- Built-in sync protocols for major strobe manufacturers
- Remote upload/download capabilities (on models with UDACT)
- Individual circuit disconnect buttons
- Remote relay modules
- Remote programming capability
- Configurable for two stage operation on eight and twelve zone models
- Two event history logs – 200 events per log

CONVENTIONAL FIRE ALARM SYSTEMS DIAGRAM

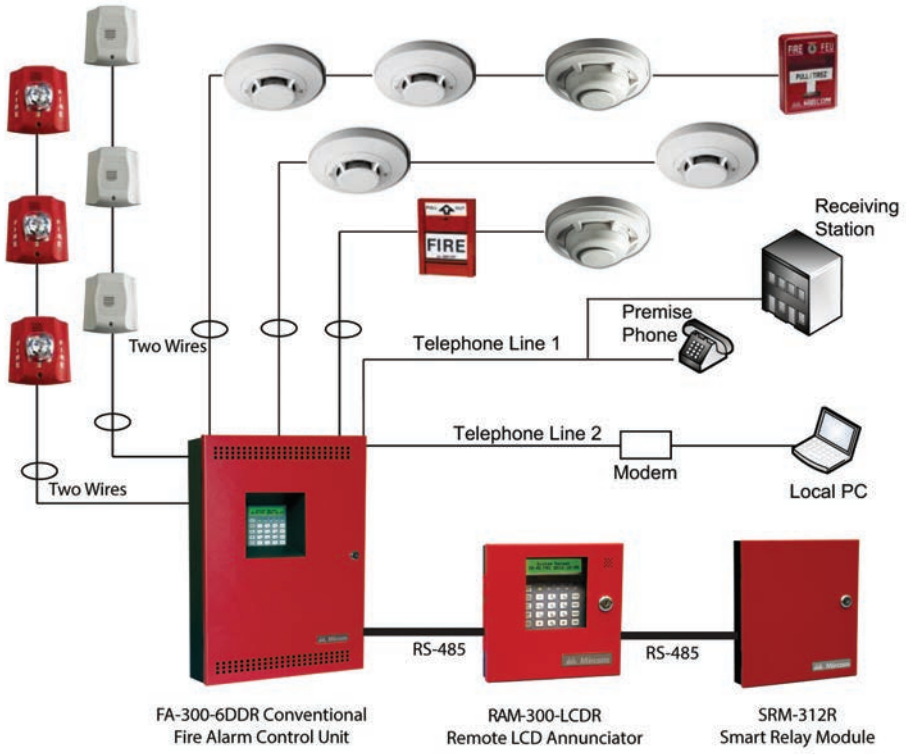

CONVENTIONAL FIRE DEVICES

CONVENTIONAL DETECTORS

Mircom™ offers the widest range of conventional manual stations, heat detectors, smoke detectors, duct smoke detectors and beam smoke detectors to meet the needs of any commercial, institutional or residential facility. For unique and special risk applications Mircom™ also supports industrial, transport and military applications with specialty gas, flame and smoke detectors, including waterproof and explosion proof models.

NOTIFICATION APPLIANCES

Fast and reliable alarm notification is of critical importance and Mircom™ offers the right solution for your application, from small commercial office to multi-building industrial complex. Mircom™ bells, horns, mini-horns and horn strobes deliver market-leading features, such as universal mounting, field adjustability for signal tone, voltage DB output and strobe candela.

AGENT RELEASE CONTROL UNIT

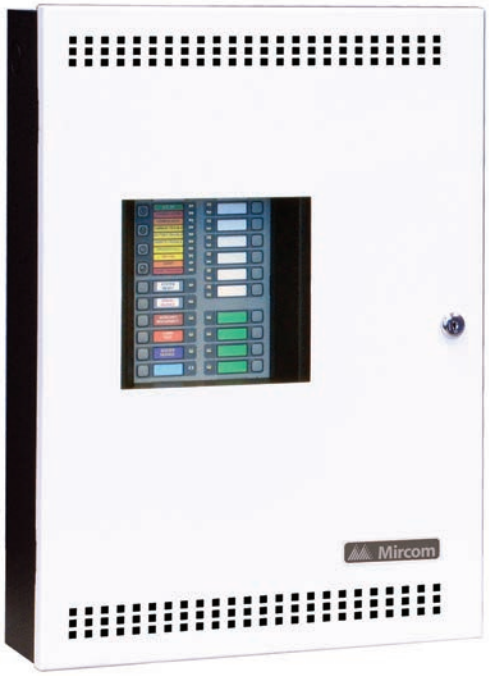

FR-320 SERIES

AGENT RELEASE CONTROL UNITS

Mircom's FR-320 is a dual releasing control panel that is field configurable for use on Deluge Sprinkler Systems, Pre-Action Sprinkler Systems and Agent Release Systems. The mode of operation is easily configured by selecting one of fourteen pre-configured modes of operation. The simple configuration process is done via the front panel and requires no laptop or complicated programming.
The FR-320 is available with or without a built-in UDACT/Digital Communicator.

- Field configurable to operate with a Deluge Sprinkler System, a Pre-Action Sprinkler System and an Agent Release System
- Six class B (Style B) input circuits
- Four class B (Style Y) output circuits
- True class A circuit configuration
- Cross zone option
- Special releasing power supply and release activation considerations preventing false dumps
- Configurable to perform two hazard areas
- 5 Amp Power Supply
- Simple panel programming through fourteen pre-configured modes of operation
- Non-Verified Alarm, Non Latching Supervisory, Latching Supervisory or Agent Release/ Water Flow depending on the Mode of Operation selected
- Configurable input circuits (2) for Manual Release Input, Abort Input or both
- Configurable output signals for steady tone (fixed) or escalating tone (programmable)

AGENT RELEASE DIAGRAM

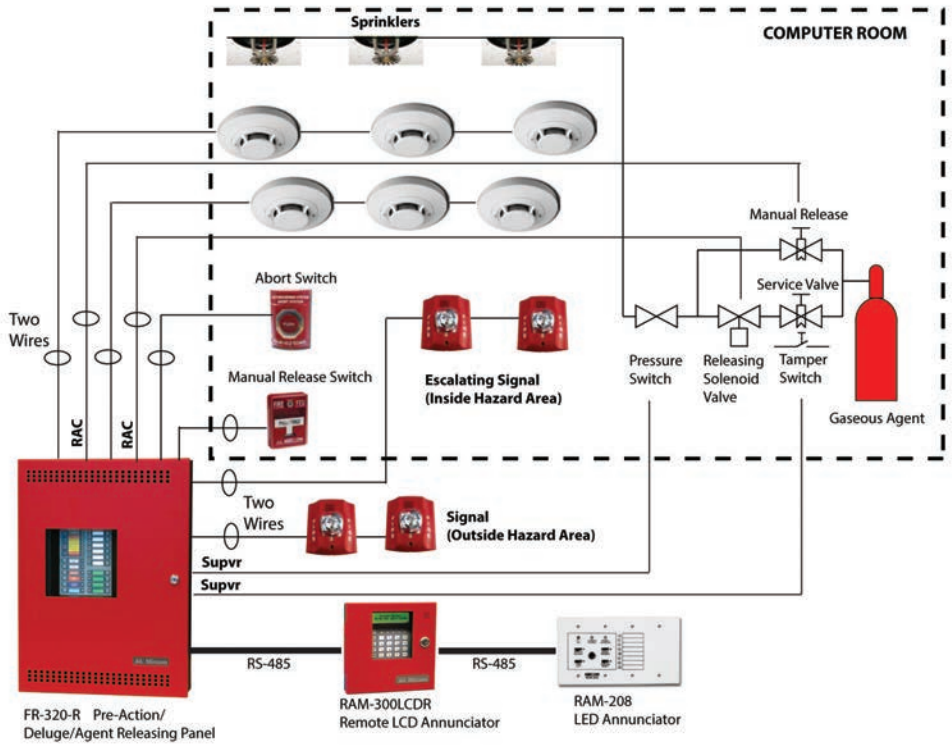

FIELD CONFIGURABLE

Mircom™ brings industry-leading detection and precise control to small fire suppression applications, including food services, manufacturing, petrochemical and computer facilities. These panels are field configurable for use in deluge sprinkler, pre-action sprinkler and agent release systems without the need for a programming computer.

A Complete System Solution for Any Project

REAL-TIME EVENT NOTIFICATION WHEREVER YOU ARE

Open Graphic Navigator™ is easily configured to instantly communicate Alarm, Supervisory, Trouble and other system events to a range of different responding authorities or personnel, including fire, security, maintenance & service staff. Open Graphic Navigator™ means that you're always connected, 24/7.

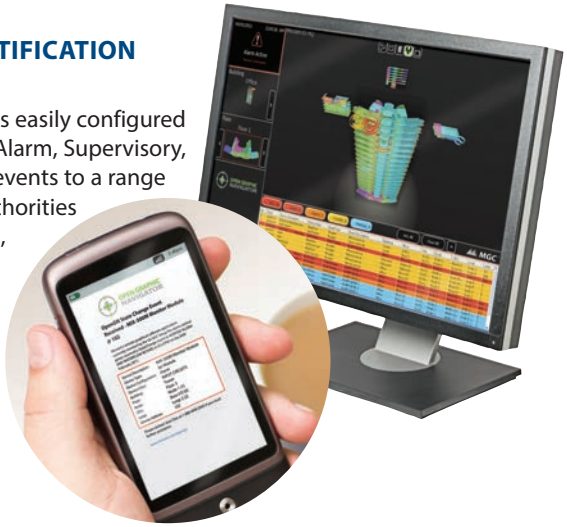

OPEN GRAPHIC™ NAVIGATOR

Winner of the 2013 Edison Gold Medal Award in the Advanced Technologies – Smart Systems category for its innovative Open Graphic Navigator.

BUILDING MANAGEMENT SYSTEM INTEGRATION

Mircom™ intelligent network systems can be integrated with ™ compatible heating, cooling, ventilation, humidification, pressurization and energy management systems to offer superior fire protection and centralized control of multiple systems.

POWER SUPPLIES & REMOTE ANNUNCIATORS

INTELLIGENT POWER SUPPLIES

Intelligent NAC expander/power supplies are compatible with the FX-2000, FX-3500 and FleX-Net Series Intelligent fire alarm control panels. The units can extend the power capabilities of existing notification appliance circuits as well as provide power for other ancillary devices. In addition, Mircom™ power supplies have the ability to operate with any UL/ULC Listed 24 VDC conventional fire alarm control panel to provide Notification Appliance Circuit expansion.

REMOTE ANNUNCIATORS

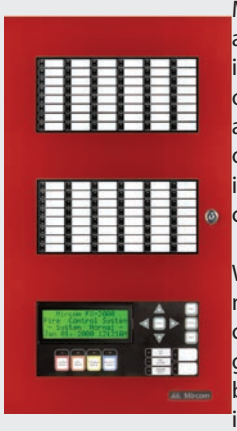

Mircom™ LED and LCD annunciators are offered in a range of configurations to allow custom tailoring of wired or networked information & control center that is best for your application. Where other system manufacturers limit configurations of zone graphics, mode and by-pass switches and indicators, Mircom™ offers a custom solution that best suits your fire detection requirements.

RAM-300LCD

Mircom™ RAM-300LCD remote annunciators are designed for use with FA-300 and FX-350 Series fire alarm panels and provide 2 by 20 line alphanumeric LCD display and control switches with access to common control menu functions.

Mircom™

mircom.com

CORPORATE/CANADA
25 Interchange Way
Vaughan, Ontario
L4K 5W3
Tel: 888.660.4655
Fax: 888.660.4113

USA
4575 Witmer Industrial Estates
Niagara Falls, N.Y.
14305
Tel: 888.660.4655
Fax: 888.660.4113

INTERNATIONAL
25 Interchange Way
Vaughan, Ontario
L4K 5W3
Tel: 905.660.4655
Fax: 905.660.4113

Corporate head office and manufacturing facility, Vaughan, Ontario, Canada

About the **Mircom™ Group of Companies**

Founded in 1991, the Mircom Group of Companies is North America's largest independent designer, manufacturer and distributor of intelligent building and life safety solutions. Reaching customers in over 100 countries worldwide, our portfolio includes: fire detection & alarm, communications & security, mass notification, nurse call, and building automation & smart technologies.

MGC's mission is to save lives and protect property by providing a line-up of innovative and advanced solutions which are scalable to satisfy diverse user demands, from small buildings to the largest complexes. Our unwavering commitment to North American manufacturing enables us to offer the highest quality and best competitive value across our vast range of products and solutions

Our global network of dedicated Sales and Service Offices, known as Mircom Engineered Systems, allows us to be a full solution provider. Through Mircom ES, we're able to provide and fully service our line-up of innovative and advanced solutions which are scalable to satisfy diverse user demands, from small & mid-size buildings to the world's most complex applications.

MIRCOM™ GROUP OF COMPANIES

Information supplied in this document is subject to change without notice. Mircom Technologies Ltd. assumes no responsibility or liability whatsoever for any errors or omissions that may appear in this document. Except as permitted by license, no part of this publication may be reproduced, stored in a retrieval system, transmitted in any form by means electronic, mechanical, using any recorded media, or any other format without the prior written permission of Mircom Technologies Ltd.
Mircom™ name and graphic design is the exclusive property of Mircom Technologies Ltd.

ISO 9001:2008 REGISTERED